Product Specification

Type	EC Motor
Model	EC092AC230V230W

Basic Parameters

Phase	~	1
Rated Voltage	VAC	230
Frequency	Hz	50/60
Rated Speed	RPM	2700
Max. Input Power	W	230
Max. Input Current	A	1.65
Sound level	dBA	63
Certification	~	CE、RoHS
Min. Ambient Temperature	℃	-25
Max. Ambient Temperature	℃	60

Technical Features

Dimensions	101*101*96.5mm
Direction of Rotation	Clockwise, Seen on Rotor
Surface of Rotor	Plastic Spraying
Type of Protection	IP55
Insulation Class	B
Operation Mode	S1
Bearing Type	Ball Bearing
Motor Protection	Locked Rotor Protection, Thermal Protection, Less and Excessive Voltage Protection, Overcurrent Protection, Soft Start
Length of Cable	500±20mm
RoHS	All Material According with RoHS
Min./Max. Humidity	5% - 90% RH
Motor Type	External Rotor EC Motor

Outline Drawing

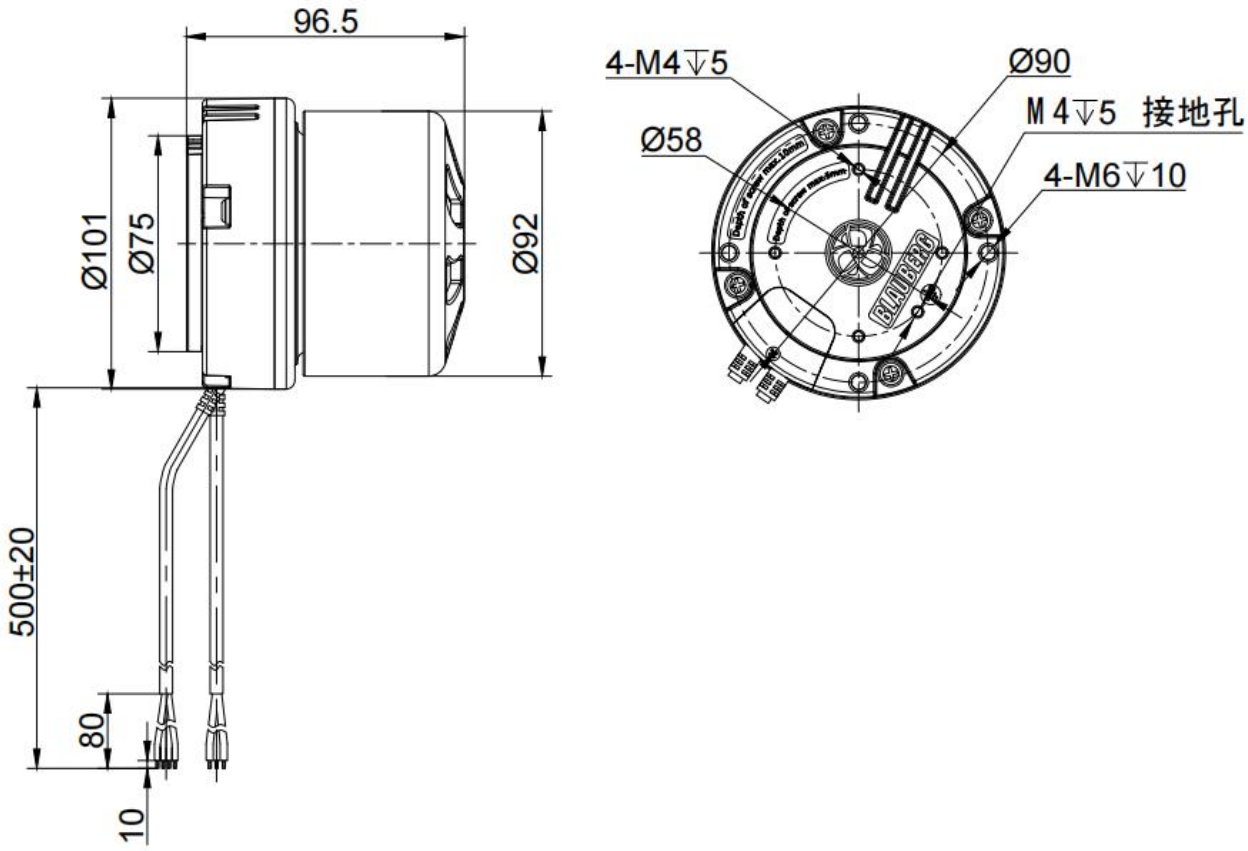

Wiring Diagram

Line	Connection		Color	Function
Power Line	PE		Green Yellow	Protective Earth
	U1	L	Brown	Live Wire
	U2	N	Blue	Neutral Wire
Control Line	U4	+10V	Red	Voltage+10V
	U5	0-10V Speed Control	Yellow	0~10V & PWM Compatible Line
	U6	FG	White	RPM Output Signal Line
	U7	GND	Blue	GND

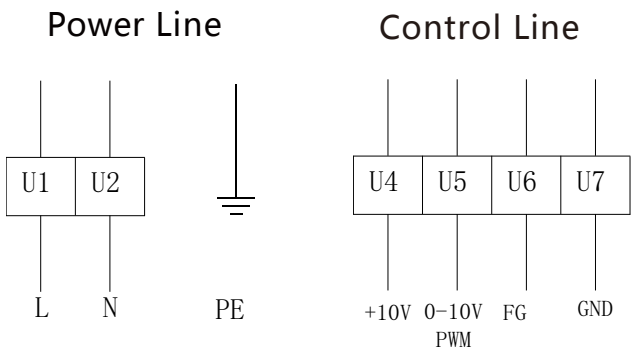

Additional Notes

1. The power line and control line of the fan should be connected in strict accordance with the wiring diagram to prevent the fan from burning out;

2. Do not connect the white signal wire directly to the red signal wire or the external DC power supply;

3. If the fan does not work after starting, please check the input voltage of the speed regulation, whichmay be improperly connected. To prevent hand or other personal injury caused by sudden start of thefan; Do not touch the impeller or rotor after electrifying;

4. It takes a few seconds for the fan to start after power on. In order to prevent personal injury, do not touch the impeller or rotor under the condition of electrifying or low speed operating;

5. Persons lacking physical, mental or sensory abilities and appropriate practical experience or expertise cannot use the fan unless directed by a person responsible for its safety. Keep out of reach of children.6. If the power wire is damaged, the manufacturer must replace the power cord;

7. As a part of the fan, the motor cannot be used alone without impeller or load;

8. After the product packaging has been disassembled, it should be repackaged if it needs to be kept in storage. The product shall be stored in a clean, well-ventilated warehouse with ambient temperature of -40℃~+80℃, relative humidity of no more than 95%, no corrosive gases in the air, and 15cm above the ground;

9.Please read this technical specification carefully before use;